RUBBERFORM®
RECYCLED PRODUCTS, LLC

BUS LANE CURB

RubberForm has designed and developed a modular Bus Lane Curbing system to keep unauthorized vehicle traffic out of dedicated bus lanes, assist in the reduction of delays due to traffic congestion, and help raise the visibility of the high-quality transit service.

Our Bus Lane Curb is the only bus curb manufactured in the USA and made with our Next-Gen Recycled Composite Material that combines recycled rubber and plastic for hard-wearing durability and low maintenance.

Bus lanes have the potential to significantly improve bus speeds, which in turn results in shorter run times, increased reliability, decreased schedule recovery times, and reduced operating costs. They can also bring an added attractiveness to passengers through lower in-vehicle travel time, reduced waiting time at stops, and vehicle crowding.

Key Features

- Easy to install, remove, and relocate – for semi-permanent to permanent use
- Flexible – conforms to road curvature and any asphalt or concrete surface
- Extremely durable – withstands heavy traffic impacts
- Resistant to temperature, UV light, oils/fuels, salts, and moisture
- Will not chip, crack, spall, or corrode
- Made in the USA with 100% recycled rubber and plastic composite material

Made in the USA

100% Recycled Material

Increase LEED Score

75 Michigan St. Lockport, NY 14094 RubberForm.com 716.478.0404 sales@rubberform.com

BUS LANE CURB SPECIFICATIONS

Models

RF-BLC40YLW/WHT

- Bus Lane Curb Center Module with yellow or white reflective stripes

RF-BLCECYLW/WHT

- Bus Lane Curb End Cap with large yellow or white reflective stripe

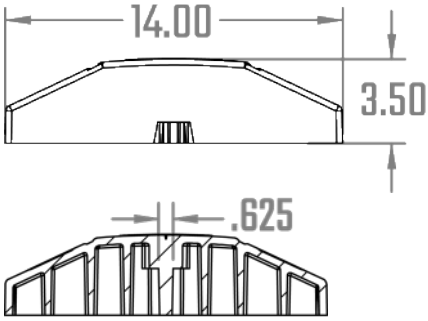

SECTION A-A
SCALE 1 : 8

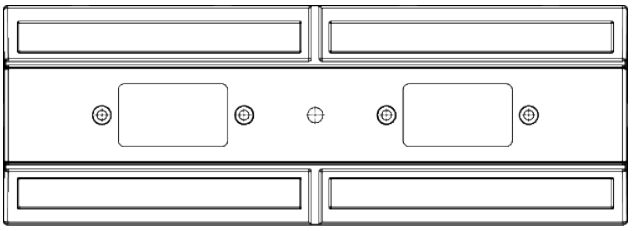

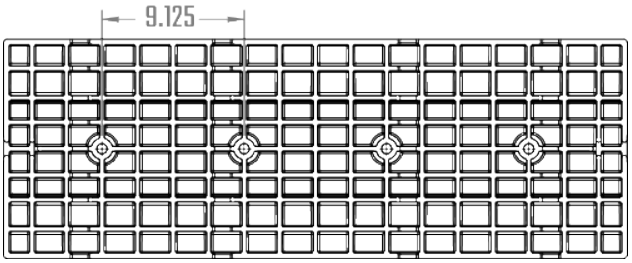

Specifications

RF-BLC40YLW/WHT

- 21.5 lbs
- 3.5"H x 14"W x 40"L
- Injection molded
- 4 mounting holes
- 4 yellow or white reflective stripes

RF-BLCECYLW/WHT

- 3.5 lbs
- 3.5"H x 14"W x 14"L
- Injection Molded
- 3 mounting holes
- 1 large yellow or white reflective stripe

Hardware Kit

RF-BLC40HWK

- 4 - 1/2" x 8" Lag Bolts
- 4 - 1/2" x 1-1/16" Washers
- 4 - 1/2" x 3" Anchors
- 4 Black Rubber Caps
- 1 Dual Flange Connector

RF-BLCECHWK

- 3 - 1/2" x 8" Lag Bolts
- 3 - 1/2" x 1-1/16" Washers
- 3 - 1/2" x 3" Anchors
- 3 Black Rubber Caps
- 1 Dual Flange Connector

RUBBERFORM®
RECYCLED PRODUCTS, LLC

75 Michigan St. Lockport, NY 14094 | RubberForm.com | 716.478.0404 | sales@rubberform.com